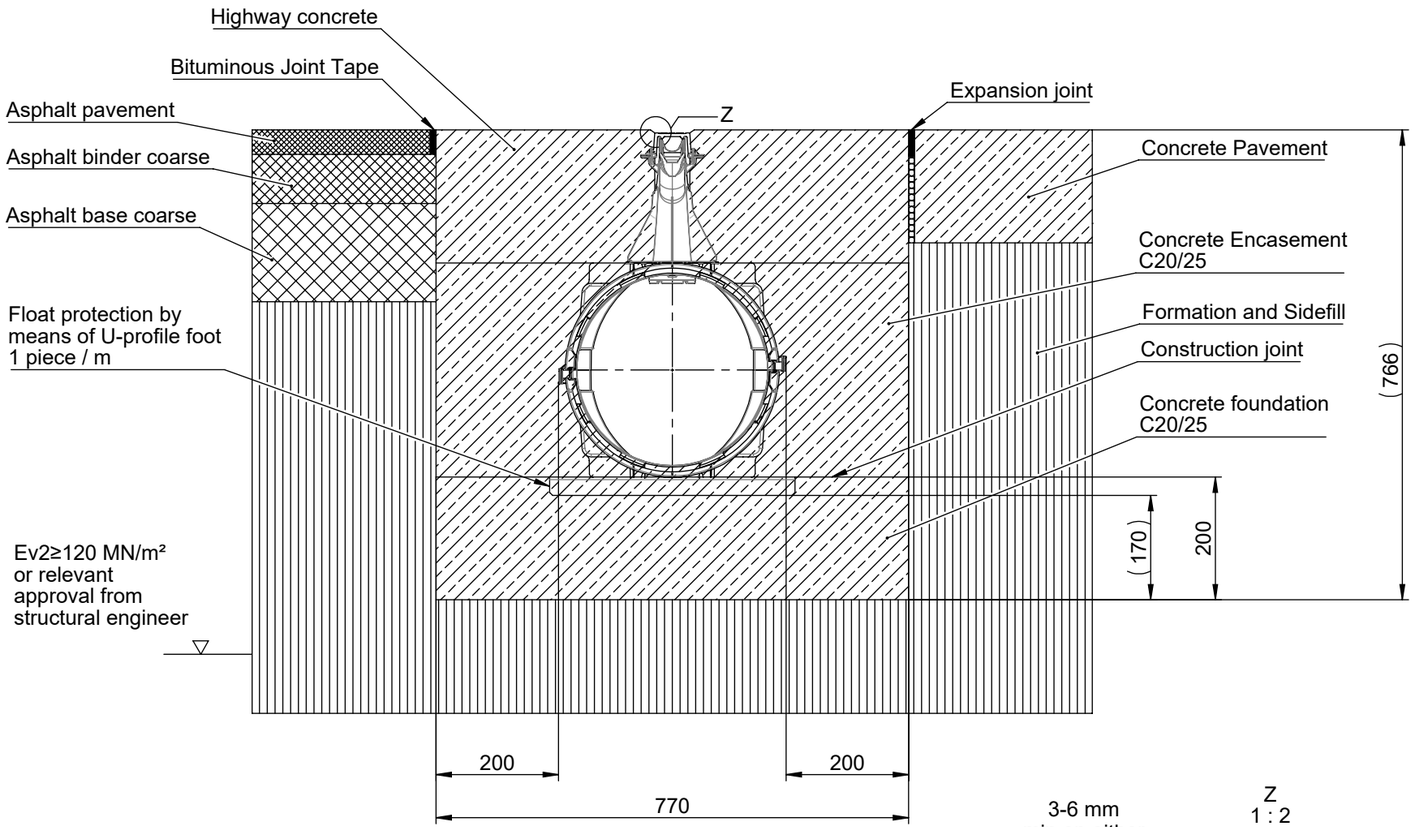

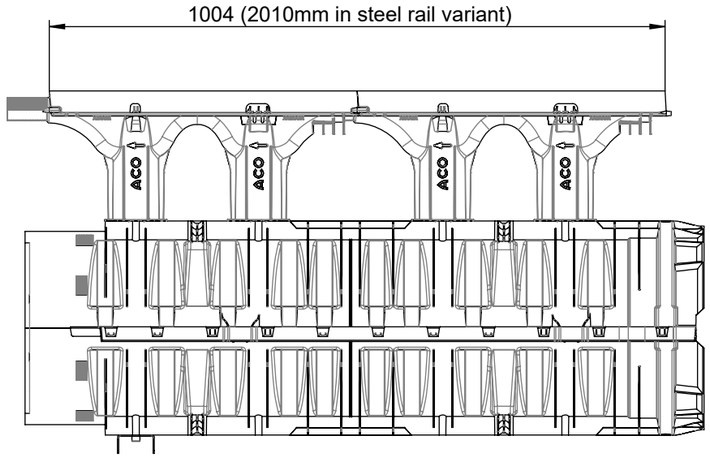

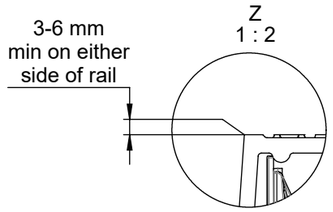

Mat.No.	Drw.No.	Item name
3004835	1115422	Qmax NEO 300 with QGuard cast iron rail 0.5 m and anti float
3000084	1115420	Qmax NEO 300 with QFlow cast iron rail 0.5 m and anti float
3004831	1140986	Qmax NEO 300 with QGuard cast iron rail 1m and anti float
3004839	1141060	Qmax NEO 300 with QFlow cast iron rail 1m and anti float
3004823	1140515	Qmax NEO 300 with QGuard galv. steel rail 2m and anti float
3004827	1140855	Qmax NEO 300 with QFlow galv. steel rail 2m and anti float
3002846	1139260	Qmax NEO 300 with QGuard composite rail 1m - black and anti float
3002832	1139569	Qmax NEO 300 with QGuard composite rail 1m - grey and anti float
3002935	1140454	Qmax NEO 300 with QFlow composite rail 1m - black and anti float
3003021	1140460	Qmax NEO 300 with QFlow composite rail 1m - grey and anti float

Ground Conditions:
The long term performance of a channel installation to sustain vertical and lateral loads depends upon A) ground conditions B) stability of the adjacent pavement and C) a durable concrete bed and surround. The recommended installation detail may require the minimum dimensions to be revised to achieve site specific EN1433 load class requirements

Isolation Joints:
The channel must be isolated from the surrounding environment. An isolation joint must be positioned up to 1500mm from the channel wall. Any dowel bars must be located no nearer than 150mm from the channel wall. Other isolation joints in surrounding slab must be continued through the channel.
Additional crack control may be required to comply wlth specifier requirements.

Concrete Surround and Reinforcement:
Ensure that the channels do not float while pouring the concrete.
The reinforcement required in the concrete surround varies with the installation group (load class) and channel size.
The combined depth of the asphalt pavement must not exceed the required dimensions.
Ensure the edge rail anchors if present are well embedded into the concrete.

Temporary Installation:
A channel installation is not complete until the final surfacing is laid. In any temporary condition, i.e. with the channel walls projecting above adjacent ground, site traffic should not cross channels. Loose boards, stone fill or cover plates will not protect the channel walls or grating.
A temporary channel crossing should be formed by raising the ground level locally, to 3 - 6mm above top of edge rail, either side of a channel for a distance of 750 to 1000mm, to form ramps. Note that the channel load class should be adequate to carry the site traffic.

Watertight Installation to EN 1433:2002:
Where ACO Qmax channels are to be installed with watertight joints, the seal between channel units must be checked for cleanliness and then smeared with lubricant jelly such as proprietary pipe joining lubricant. Guidance on the preparation should be sought from the lubricant manufacturer.
ACO Qmax channels are tested to confirm compliance with the watertightness requirements of EN 1433 when filled with water to the top of the channel bore (below the inlet arches). Installation must be in accordance with ACO's recommendations and the recommendations of the lubricant manufacturer.
It is envisaged that the channel joints would not be subject to movement, but any movement of the joint might compromise the watertightness.

Channel Protection:
Avoid contact between compaction equipment and top of ACO channel edge rail. The installer must ensure that the finished surface level lies above the top of the edge rail (by at least 3-6mm). Covering or protecting the rails, before concreting the haunch or laying blocks, removes the time and cost associated with cleaning the channel and grating of cement material and embedded stones. During site work ensure that the plastic protective strip (supplied with product) is not damaged or displaced, in order to prevent debris entering the channel during construction. Ensure the edge rail anchors are well embedded into the concrete.

Best Practice and Workmanship:
ACO can give guidance with respect to the most suitable methods of installation for each of the products in the ACO Qmax range.

ACO GmbH
Am Ahlmannkai
24782 Büdelsdorf
www.aco.com

material number	drawing-no.:	index:	projection:ISO-E	format
	1376776	002		A3
rkumar	doc-type: smeier			scale: 1:10

title:
Qmax NEO 300
Qmax NEO 300 - Installation drawing F900 - with standard rails and anti float
Qmax NEO 300 - Installationszeichnung F900 - mit Standardzarge und Auftriebsicherung

pre-released

The reproduction, distribution and utilization of this document as well as the communication of its contents to others without express authorization is prohibited. Offenders will be held liable for the payment of damages. All rights reserved in the event of the grant of a patent, utility model or design. Observe copyright by ISO 16016

release date: 06.05.2024
sheet: 1/1

DIN A3 07/2024